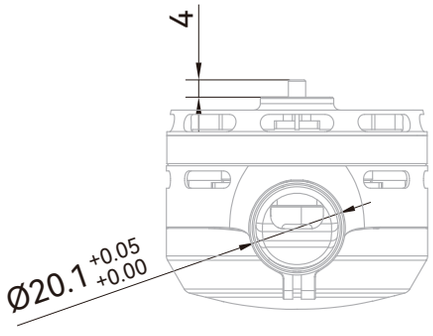

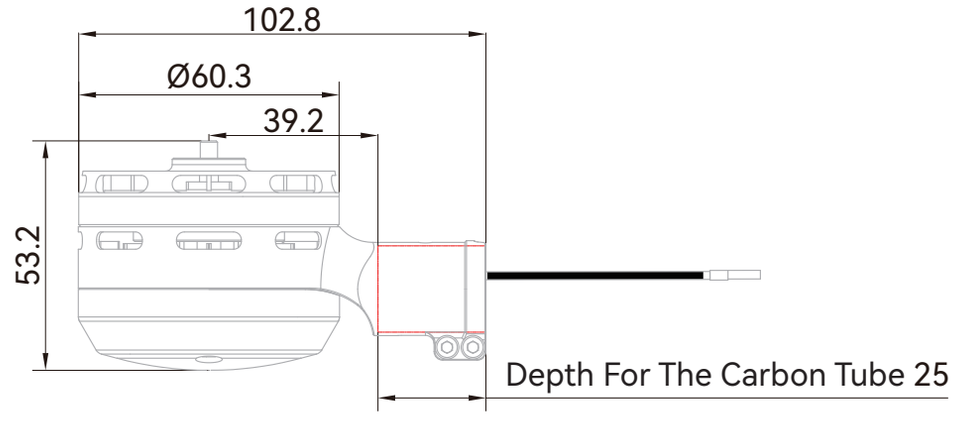

Power Wires 18#AWG
Red is The Positive Electrode
Black is The Negative Terminal

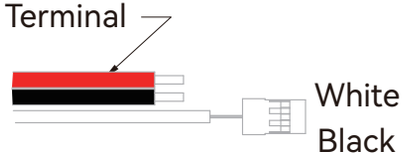

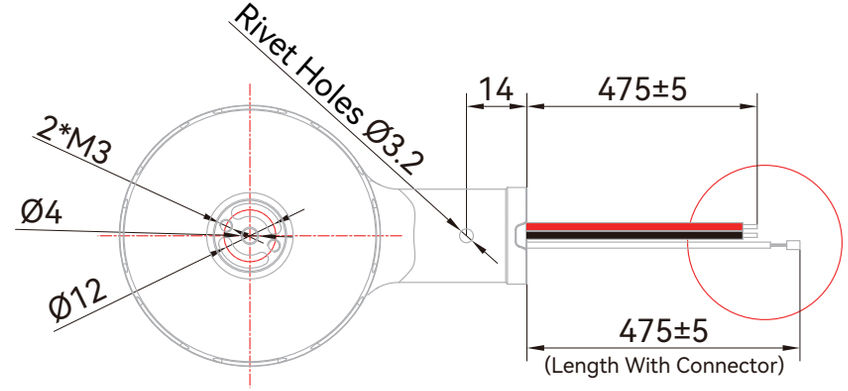

Carbon Tube Hole Dimension Drawing

