

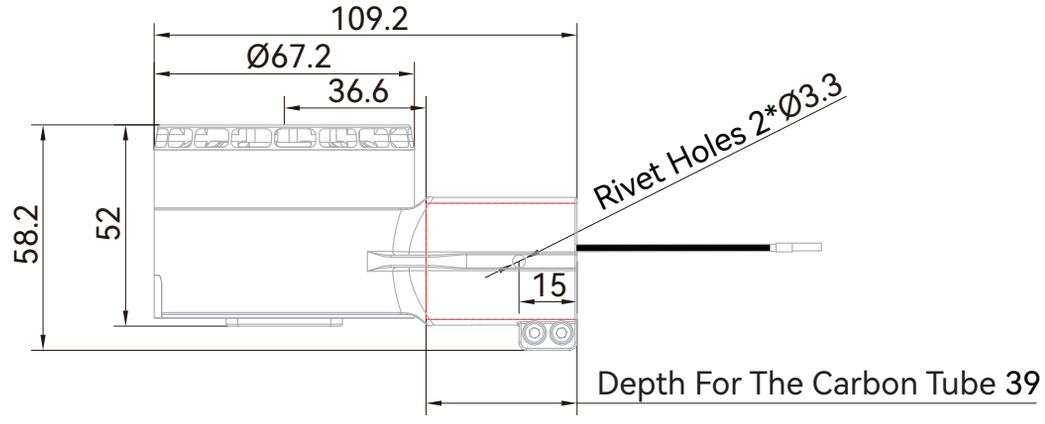

Power Wires 14#AWG
Red is The Positive Electrode
Black is The Negative Terminal

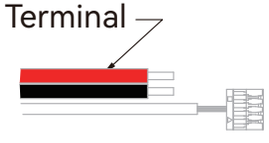

Blue
Yellow
Black
Red

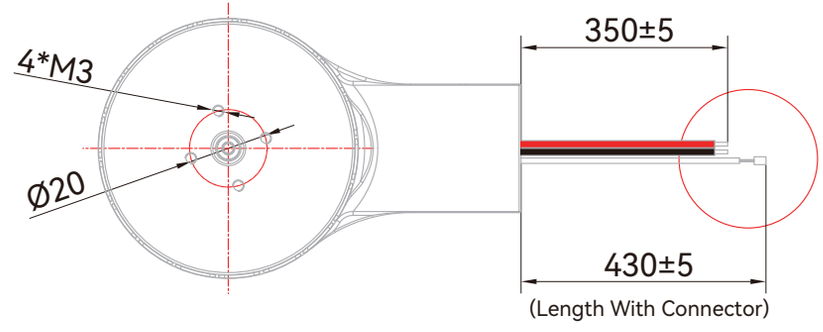

Carbon Tube Hole Dimension Drawing

