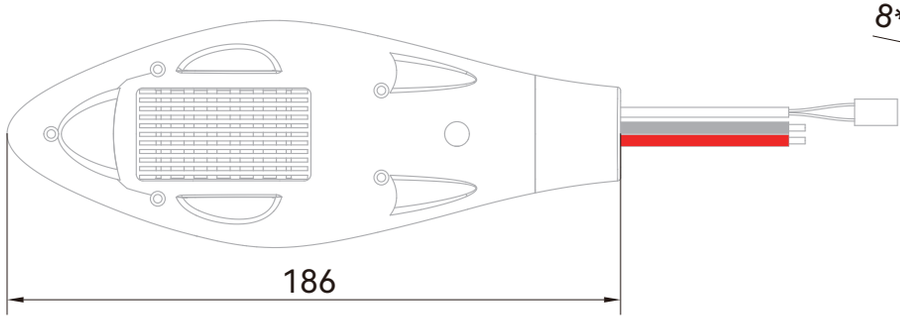

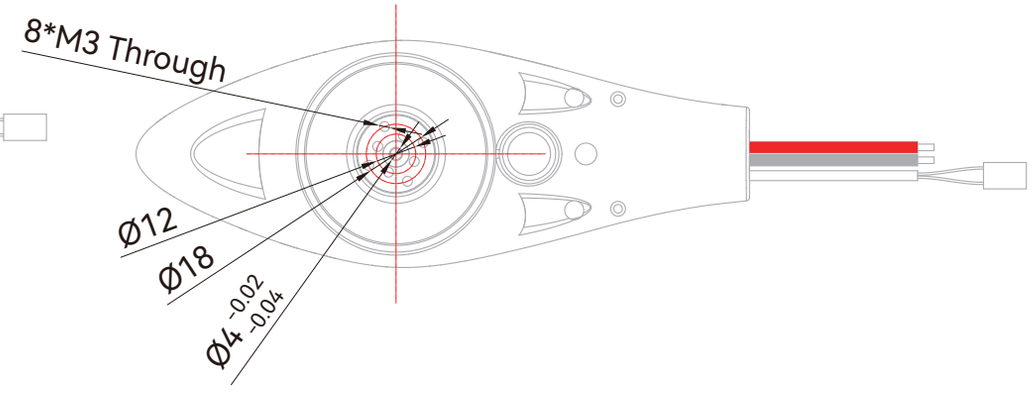

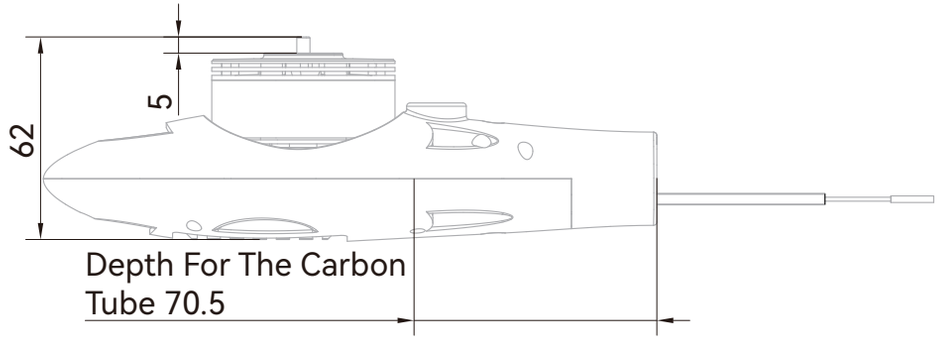

Power Wires 14#AWG

Red is The Positive Electrode
Black is The Negative Terminal



White PWM
Black PWMGND

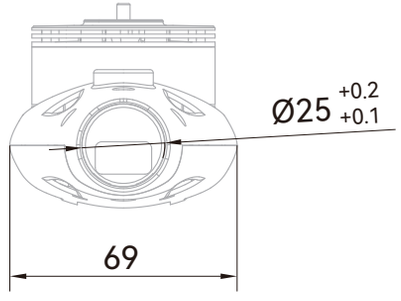



SECTION A-A

Carbon Tube Hole Dimension Drawing

