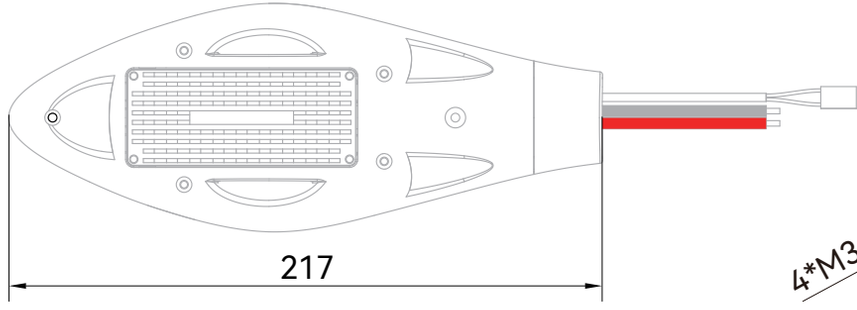

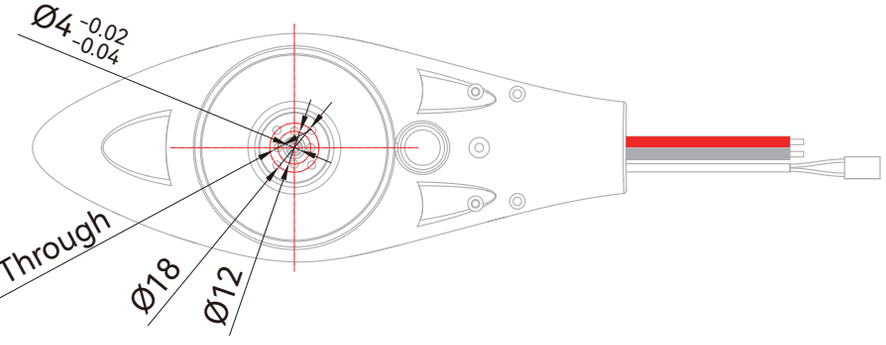

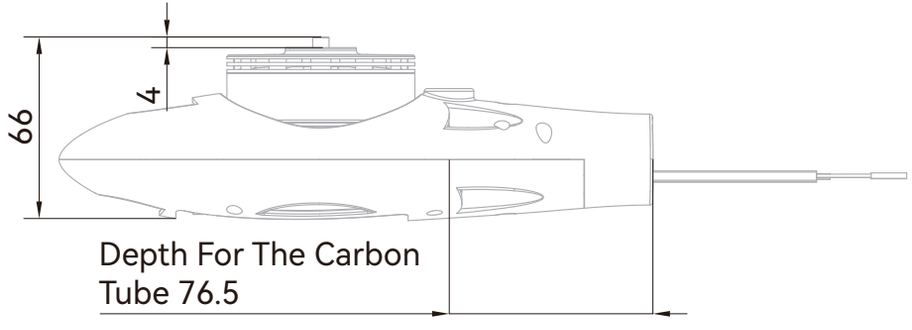

Power Wires 12#AWG
Red is The Positive Electrode
Black is The Negative Terminal

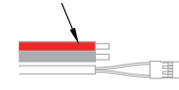

White PWM
Black PWMGND

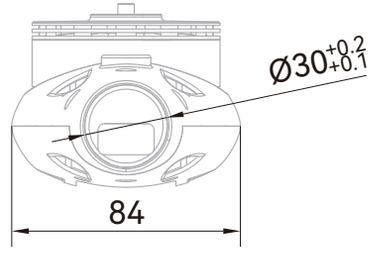

Carbon Tube Hole Dimension Drawing

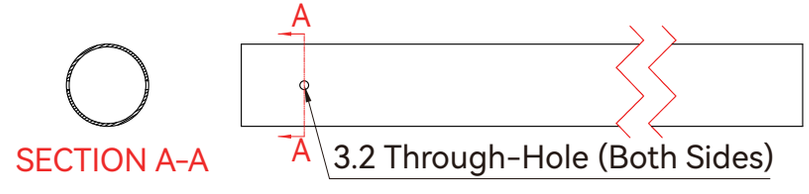

SECTION A-A